# C66132

## INSTALLATION INSTRUCTIONS SHEET

**START FROM HERE**

- Make sure power is completely off at the fuse box.
- Have your fixture installed by a qualified licensed electrician
- Prepare everything in clear area.
- Wear gloves at all times during this installation.
- Read instructions carefully before you start assembly.
- Keep this instruction sheet for future reference.

**Technical Support:** 1-844-628-8368

**Please Note:**

- All Matteo Lighting fixtures come with pre-wired module(s).
- Unless instructed to do so, please do not touch any part of the module(s) as unnecessary contact with the module could cause permanent damage.

THIS LUMINAIRE MUST BE MOUNTED OR SUPPORTED IN A JUNCTION BOX

*CE LUMINAIRE DOIT ÊTRE MONTÉ OU SUPPORTÉ DANS UNE BOÎTE DE JONCTION*

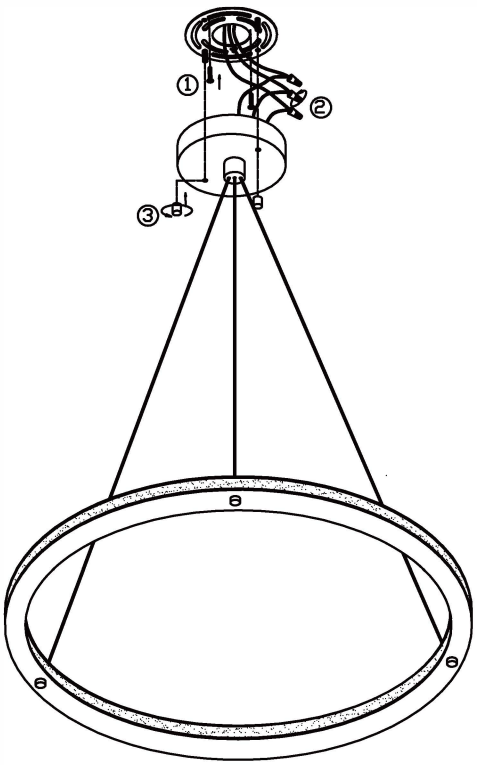


- Ensure main supply is switched off.
- Fit mounting plate to electrical junction box using junction box screws provided in accessory bag (1).
- Connect wires (2) according to color (White to White, Black to Black). Connect all earth lug together onto the crossbar with green screw to tight.
- Fit canopy onto mounting bracket with finials (3).
- Reconnect power.
- Light source: DC LED 40W, dimmable, 3CCT: 3000K, 4000K, 5000K, CRI90.

**DIMMABLE AND 3 COLOR TEMPERATURE ADJUSTABLE (3000K/4000K/5000K)**

- Short press on/off switch will change the color temperature to 3000K, 4000K or 5000K.
- TRIAC dimming, brightness adjust from 10% ~100%.
- Adjust the fixture to 100% brightness, keep the light on for over 10 seconds, then off for over 60 seconds, it will memorize the CCT and keep it at next power on.

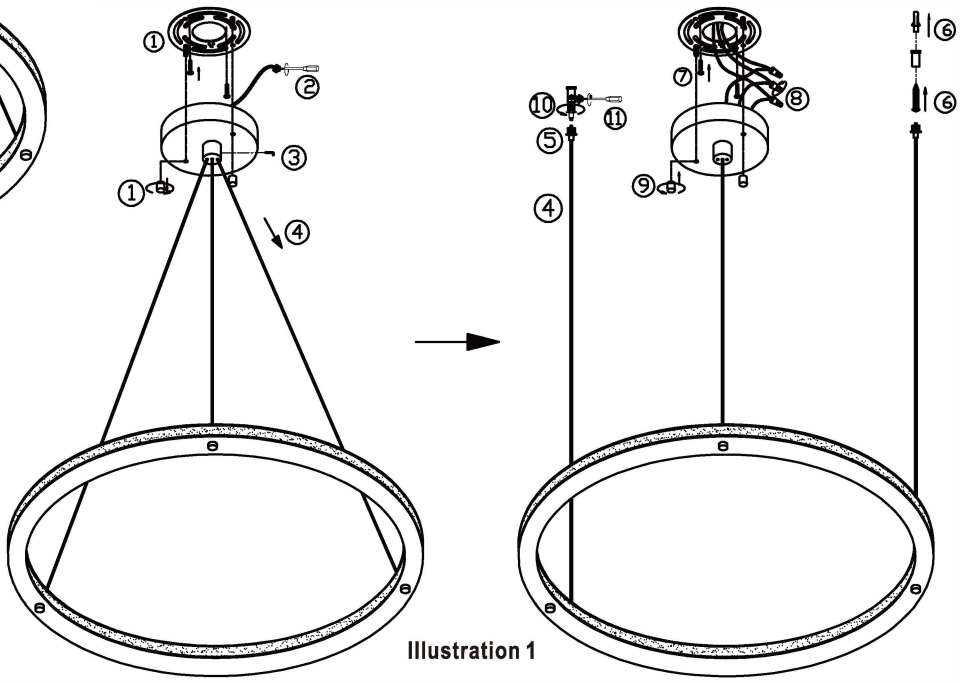


Illustration 1

**FOR ALTERNATIVE SIDE CANOPY INSTALL (See Illustration 1)**

- Loosen the finials from the fixture, and remove the mounting back plate(1)
- Use the screwdriver to loosen the screw on the steel cable stopper(2)
- Use the Allen key (provide in the accessory bag) to loosen the screw (3)
- Pull out the steel cable from canopy (4)
- Pull the steel cable through aircraft barrel and stopper (5).
- Secure aircraft barrel to mounting surface with anchor and screw (6). Adjust cable to desired length and secure with set screw (11)
- Fit mounting plate to junction box (7)
- Connect wires according to color (White to White, Black to Black). Connect all earth lug together onto the crossbar with green screw to tight.(8)
- Fit canopy onto mounting bracket with finials (9).
- Insert wire gripper into aircraft barrel to close (10)


www.matteolighting.com
Toll Free. 1.844.628.8368 E. info@matteolighting.com


MATTEO